Traffic Prediction in an LTE Network

The objective of this project was to develop a time-series forecasting model for hourly cellular data traffic using historical data and network utilization metrics. A **three-layer Long Short-Term Memory (LSTM) recurrent neural network** was implemented using TensorFlow to capture the temporal dependencies in the data. The model was trained to predict future data volume based on a 72-hour look-back window. The final model achieved a **Mean Absolute Percentage Error (MAPE) of 16.89%** on the test set, demonstrating reasonable accuracy for this forecasting task.

1. Introduction:

With the high-paced development of smartphone technology, it is estimated that there will also be rapid cellular traffic growth. Also, the existence of services with completely different needs can result in perpetually dynamic traffic patterns and network capability requirements. Smartphone Internet not only augments people's lives with entertainment but also provides an increasing amount of necessary information and access to needed services for daily living.

Cellular communication is a very common a largely popular technology. Cellular technology uses a network of base stations and radio cells to provide wireless communication to mobile devices, allowing for connections to be handed off between cells as users move. Recently the amount of cellular data traffic has soared exponentially but nevertheless, Cellular users will expect high speed connectivity from network operators [1]. Cellular network traffic prediction plays an important role in the design, management, and optimization modelling of a telecommunication network. The prediction of cellular traffic can permit the planning capacity of a network and the improvement of a network's QoS [2]. 4G Long-Term Evolution (LTE) and 5G traffic is of significant interest because these are the common network types present in Cameroon.

2. Related Work

In [2], a variant of the LSTM model was proposed, which combines single-exponential smoothing with long short-term memory (SES-LSTM) to predict cellular traffic. The output from a single-exponential model was processed using an LSTM model to predict the network load. The intelligent system was evaluated by using real cellular network traffic that had been collected in a kaggle dataset. The results of the experiment revealed that the proposed method had superior accuracy, achieving R-square metric values of 88.21%. In [3], they used the prophet model developed by facebook to get short term forecasting. They used 5 months of daily traffic data to train the model and one month for forecasting and testing the model. Their model obtained a 44.22% for MAPE, 0.9 for EVS and 0.8980 for the R-squared score. Moreover, in [1], an LSTM was trained on real world call data to predict cellular traffic. The model was compared with the statistical ARIMA model, where it out-performed the model and the proposed Feed Forward Neural Network model both in training and in testing. The model obtained an impressive mean average error of 2%. These models obtained impressive performances after training, but focused on just calls on a cell tower which doesn't take into account SMS being sent to the cell towers.

3. Data Analysis and Preparation

Data Source and Structure

The data used in this project was generated using real data from a cellular network. The data was previously used to study the traffic in a network using the prophet model.

The analysis used an hourly traffic dataset containing **54,781 records** spanning from 2019-01-01 to 2020-07-29.

Column Name	Data Type	Description
Cell	Object	Identifier for the cellular base station.
Datetime	Datetime	The timestamp for the hourly record.
Data_Volume	Float	The primary target variable for prediction (traffic volume).
PRB_Available_DL	Float	Physical Resource Block (PRB) availability in the downlink.
PRB_Utilization_Percent	Float	Percentage of PRB utilized in the downlink.

Feature Engineering

A new feature, **PRB_Util_Qty_True**, was calculated to represent the absolute quantity of utilized PRBs. This was derived by multiplying PRB_Utilization_Percent by PRB_Available_DL.

Preprocessing Steps

1. **Time Series Conversion:** The Datetime column was correctly converted to a datetime data type.
2. **Scaling:** All numerical data was normalized between 0 and 1 using the `MinMaxScaler` from scikit-learn, a critical step for preparing data for neural networks.
3. **Sequence Creation:** The data was transformed into sequential inputs for the LSTM model using a `LOOK_BACK` **window of 72 steps** (72 hours), meaning the model uses the last 72 hours of data to predict the next hour.

Analysis of Capacity over time

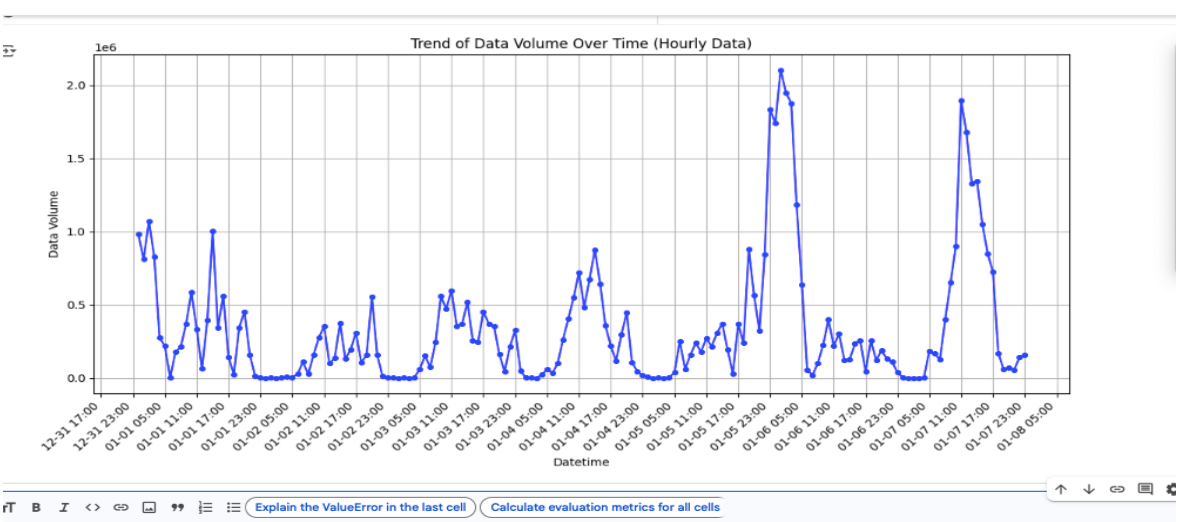

Fig 1: Trend of raw data over time

Capacity measurements focus on the **maximum theoretical limit** or the **design capability** of a network element (like a link or a cell tower). They are typically measured in terms of data rate and resource availability.
The graph above shows peak capacity used on Saturday particularly between 17:00 and 4:00

Analysis of Congestion over time

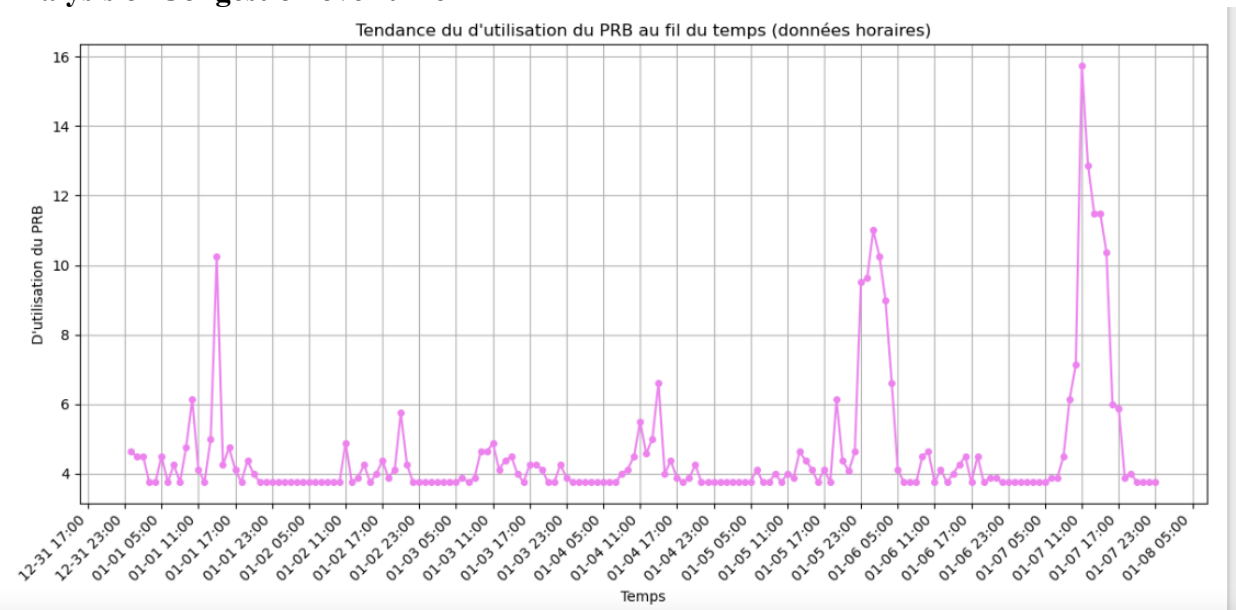

Congestion measurements focus on **real-time performance degradation** and the **rate of resource utilization**. A value indicating high utilization or poor performance is a sign of congestion.
The graph above is a plot of the usage of the physical resource block (PRB) over time, indicating that we have similar congestion usage during similar periods like capacity over time but within weekdays the congestion significantly drops

3. Model Configuration and Performance

LSTM Model

The **Long Short-Term Memory (LSTM)** model is a type of **Recurrent Neural Network (RNN)** designed to overcome the vanishing gradient problem, which makes standard RNNs ineffective at learning long-term dependencies in sequential data. LSTMs are particularly well-suited for tasks like natural language processing, speech recognition, and time series prediction.

Core Concept

Standard RNNs struggle to remember information for long periods because the influence of earlier inputs on the current output can rapidly diminish (vanish) during backpropagation. LSTMs solve this by incorporating a **memory cell** and three specialized **gates** that regulate the flow of information. This allows the network to selectively **remember** or **forget** information over extended sequences.

Components of an LSTM Cell

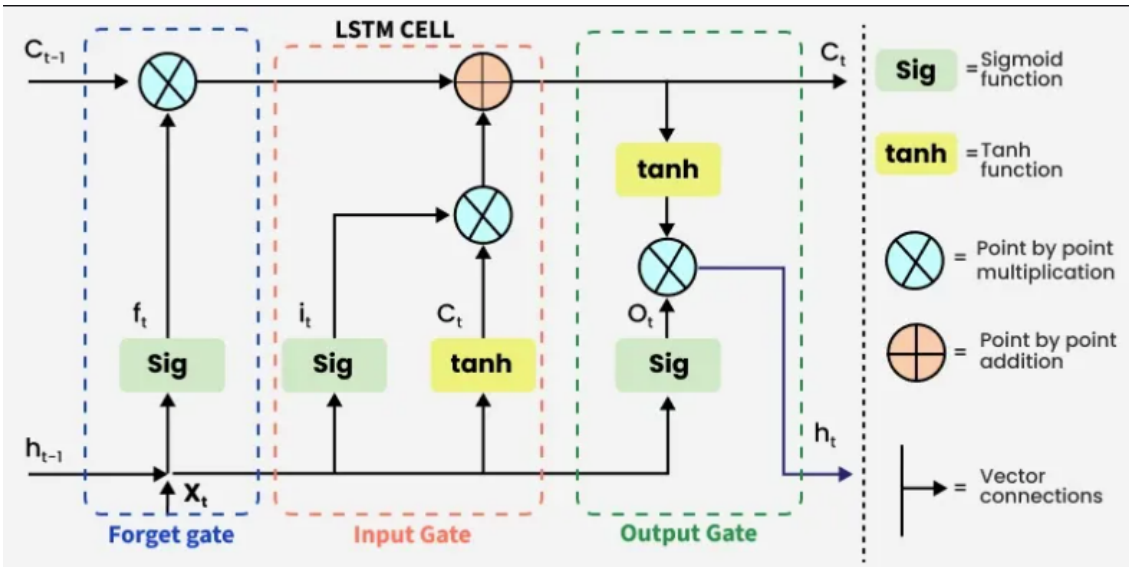

Each LSTM cell processes the current input (xt) and the previous hidden state (ht−1) and previous cell state (Ct−1) to produce a new hidden state (ht) and cell state (Ct).

The three gates and the cell state are:

1. The Cell State

The **cell state** is the "memory" of the LSTM. It runs straight through the entire chain of cells, with only minor linear interactions. The gates regulate what is added to or removed from the cell state.

2. The Forget Gate

This gate decides what information from the previous cell state should be discarded. It looks at the current input and the previous hidden state and outputs a number between 0 and 1 for each number in the cell state.

3. The Input Gate

This gate determines which new information is going to be stored in the cell state. It has two parts:

- **The sigmoid layer**: Decides which values to update (0 to 1).
- **The tanh layer**: Creates a vector of new candidate values that could be added to the state.

The new cell state is then calculated by combining the past state modified by the forget gate and the new candidate values modified by the input gate.

4. The Output Gate

This gate determines what the next hidden state will be, which is based on the cell state.

- It uses a **sigmoid layer** to decide which parts of the cell state to output.
- The cell state is passed through tanh (to push the values between -1 and 1) and then multiplied by the output of the sigmoid gate.

The **hidden state** is then used for predictions and passed along to the next time step.

LSTM Architecture

The model is a **Sequential** Keras model.

Layer	Type	Units	Notes
1	LSTM	100	return_sequences=True.
2	LSTM	100	return_sequences=True.
3	LSTM	100	Final LSTM layer.
4	Dense	1	Output layer for the single-step prediction.

Training and Evaluation

- **Loss Function:** Mean Squared Error (MSE).
- **Optimizer:** Adam.
- **Epochs:** 50.
- **Lookback:** 24
- **Forecast_steps:** 96
- **Validation Split:** 20% of the training data was used for validation.

The training history plot indicates that both the training and validation loss decreased and stabilized over the 50 epochs, suggesting the model trained effectively without significant overfitting.

Feature Engineering

Since the model was not capturing the nature if the data, we added more features to indicate seasonality which the model can learn and add to its previous knowledge and make it better. We added **time-based features** that capture the **daily** and **weekly seasonality** of the data volume. This converted our model into a more robust **Multivariate (or LSTM-Exogenous)** model.

Column Name	Data Type	Description
Cell	Object	Identifier for the cellular base station.
Datetime	Datetime	The timestamp for the hourly record.
Data_Volume	Float	The primary target variable for prediction (traffic volume).
PRB_Available_DL	Float	Physical Resource Block (PRB) availability in the downlink.
PRB_Utilization_Percent	Float	Percentage of PRB utilized in the downlink.
Hour_sin	Float	Cyclic transformation of hour of day
hour_cos	Float	Cyclic transformation of hour of day
Day_of_week_sin	Float	Cyclic transformation of day in the week
day_of_week_cos	Float	Cyclic transformation of day in the week

Multi-Step Forecasting

The notebook demonstrates a multi-step forecasting capability by predicting the next **24 hours** of data volume. The forecasting function utilizes a rolling window, using the last predicted value as input for the next time step's prediction. The final plot compares the model's 24-hour forecast against the last 72 hours of actual data.

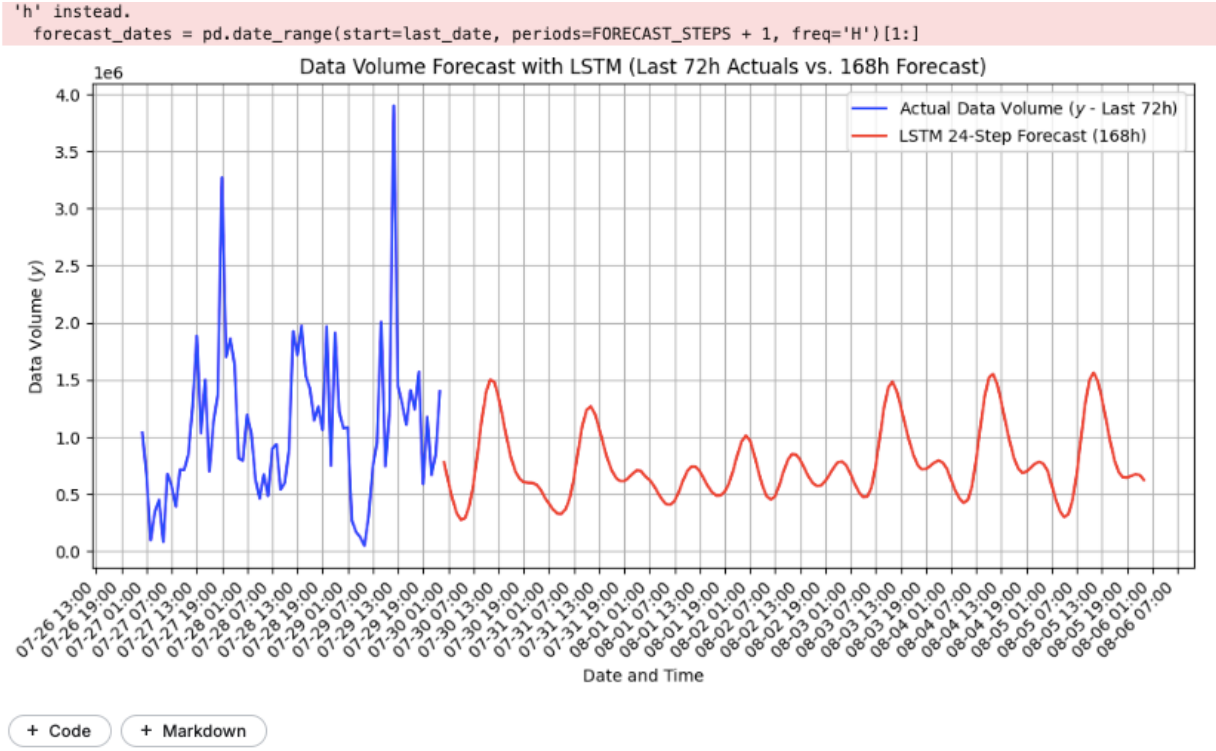

Fig 2: A forecast for the entire week with our model

Test Set Performance

The final evaluation of the model's predictions on the unscaled test set yielded the following results:

Metric	Value	Interpretation
Root Mean Squared Error (RMSE)	76,999.91	The standard deviation of the residuals (prediction errors).
Mean Absolute Error (MAE)	131,450.95	The average magnitude of errors, with all individual differences weighted equally.
Mean Absolute Percentage Error (MAPE)	**16.89%**	The average percentage difference between the predicted and actual values.

4. Conclusion

The LSTM model successfully captures the temporal patterns in the hourly cellular traffic data. With a MAPE of **16.89%**, the model provides a moderately accurate 24-hour forecast. The multi-layer LSTM structure and the use of the PRB_Util_Qty_True feature are effective in handling the time-series forecasting task.

5. Analysis of the Flask Application

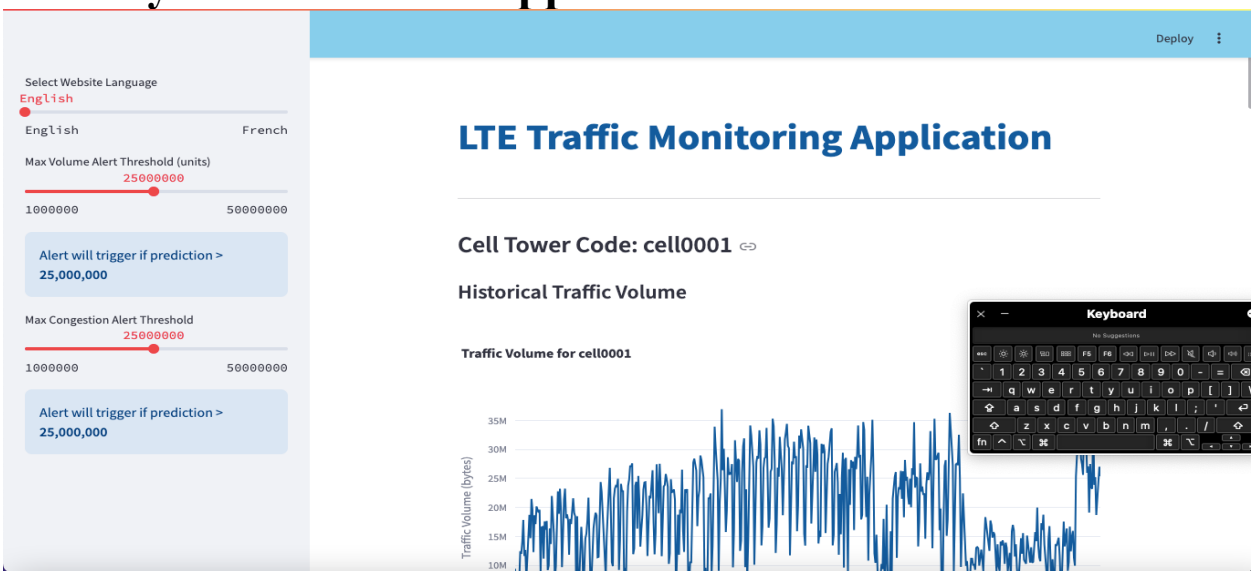

Fig 4: Image of flask application

Our Flask application initially contains historic data about the cell towers which we plot and it also loads our LSTM models so that we can create forecasts for a given number of days.
To the left of the application, we have sliders which allows the user to select the language and two other sliders below to indicate the maximum capacity threshold and congestion threshold on the network, beyond which an alert can be signaled.
The application also gives the user a possibility of getting an exact prediction as seen in the image below.

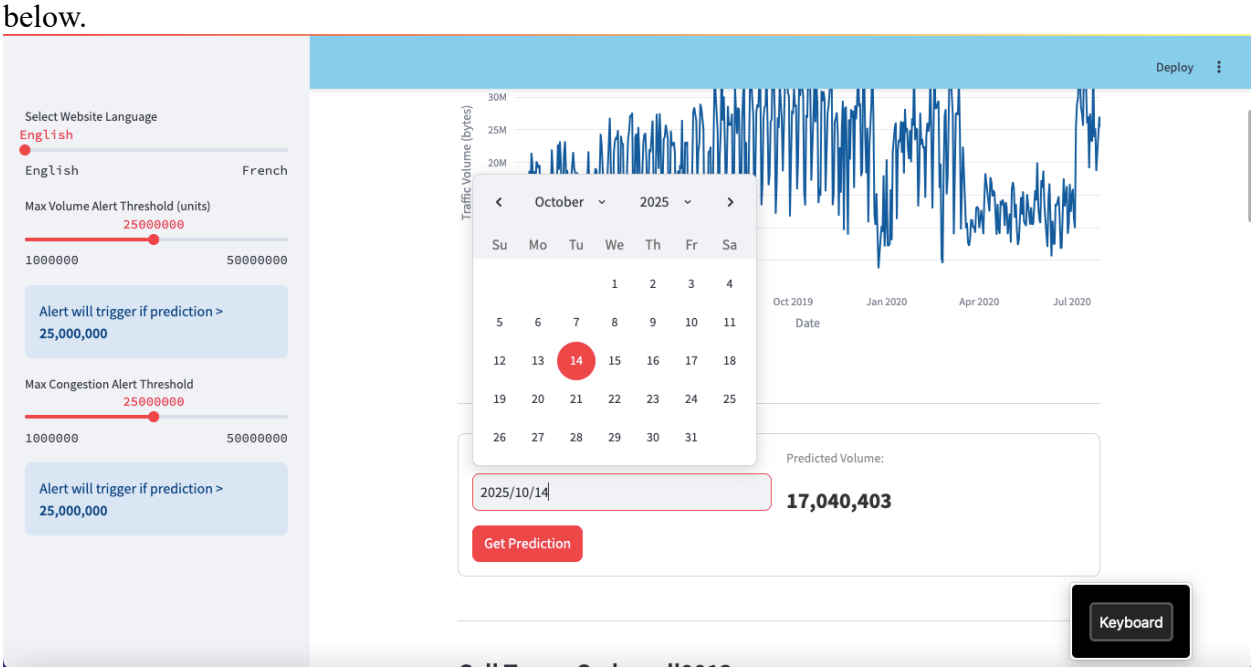

Reference:

[1] S. Jaffry and S. F. Hasan, “Cellular Traffic Prediction using Recurrent Neural Networks,” in *2020 IEEE 5th International Symposium on Telecommunication Technologies (ISTT)*, Shah Alam, Malaysia: IEEE, Nov. 2020, pp. 94–98. doi: 10.1109/ISTT50966.2020.9279373.

[2] F. W. Alsaade and M. Hmoud Al-Adhaileh, “Cellular Traffic Prediction Based on an Intelligent Model,” *Mob. Inf. Syst.*, vol. 2021, pp. 1–15, Jul. 2021, doi: 10.1155/2021/6050627.
[3] D. Chmieliauskas, “LTE Cell Traffic Grow and Congestion Forecasting,” ResearchGate. Accessed: Sep. 23, 2025. [Online]. Available: https://www.researchgate.net/publication/345446849_LTE_Cell_Traffic_Grow_and_Congestion_Forecasting